SHERLE WAGNER INTERNATIONAL

STONE INSERT KEYSTONE LEVER VOLUME CONTROL AND DIVERTER TRIM 2160LV-ESC-XXXX-XX

2160LV-ESC-BRTI-GP

PRODUCT FEATURES

- Available in all Sherle Wagner International finishes
- Solid brass/bronze construction
- Trim only used in conjunction with 1/2″ or 3/4″ ceramic cartridge volume control valves and Diverter valves
- Valve sold separately, see sales representative for options
- Includes stem extension
- Refer to stone chart for standard stone insert, contact sales associate for custom stone options

- Required add-ons for installation: See sales representative
  VLVE-1/2-LH or VLVE-1/2-RH 1/2″ inwall valve
  VLVE-3/4-LH or VLVE-3/4-RH 3/4″ inwall valve

AVAILABLE METAL FINISHES

PN Polished Nickel
CP Polished Chrome
BN Brushed Nickel
BC Brushed Chrome
SB Satin Brass
OB Oil Rubbed Brass
PB Polished Brass
GP Gold Plate
AL Almond Gold
RG Rose Gold
ES English Silver
BS Butler Silver
AP Antique Pewter
PE Black Pearl
BG Burnished Gold
AG Antique Gold
SP Satin Platinum
HP High Polished Platinum
BP Burnished Platinum

AVAILABLE ONYX INSERTS

BROX Brown Onyx
PKOX Pink Onyx
GROX Green Onyx
BKOX Black Onyx
WHOX White Onyx
HNOX Honey Onyx

AVAILABLE SEMIPRECIOUS INSERTS

RKCR Rock Crystal
BRTI Brown Tiger Eye
JASP Jasper
RSQU Rose Quartz
BLTI Blue Tiger Eye
RHOD Rhodochrosite
AMET Amethyst
MALA Malachite
LAPI Lapis Lazuli
BKOB Black Obsidian

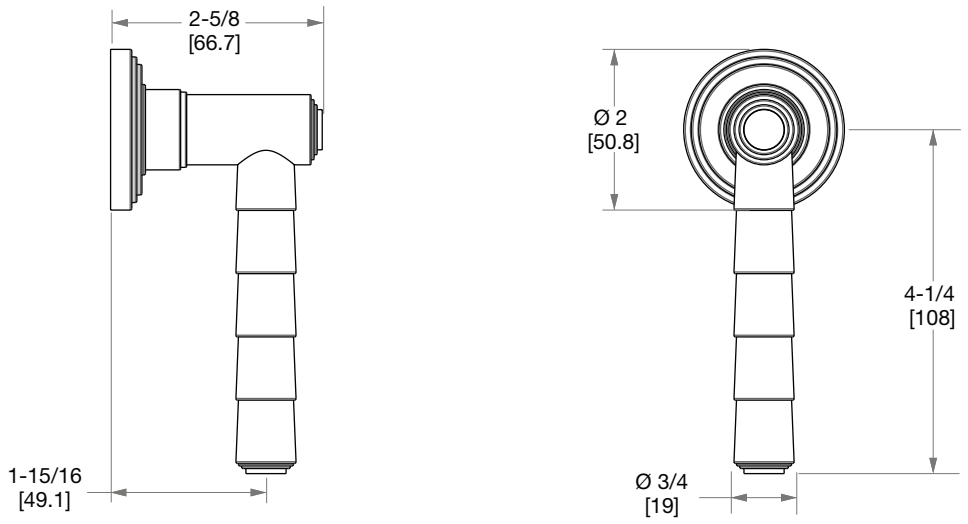

The measurements shown are for reference only. Products and specifications shown are subject to change without notice.

Rev D